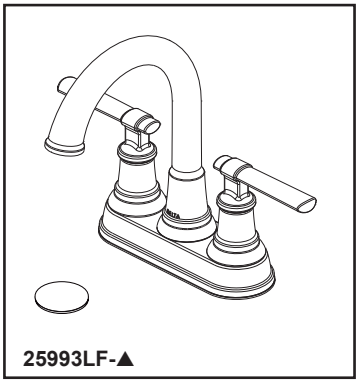

25993LF-▲

see what Delta can do℠

BATHROOM FAUCET

■ Kahn™ Bath Collection
■ Two Handle Deck Mount

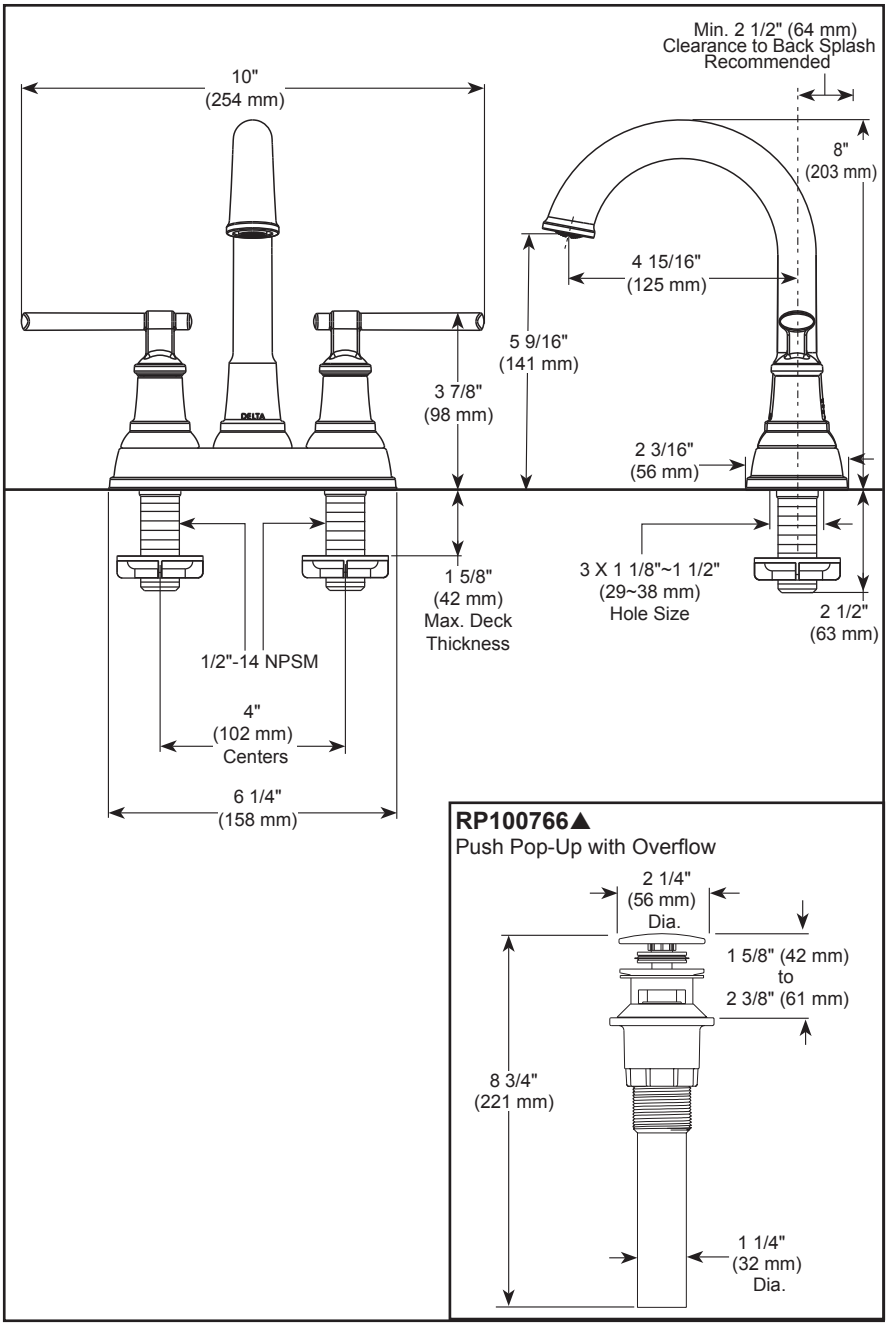

▲ Designate proper finish suffix

STANDARD SPECIFICATIONS:

- Max flow rate 1.2 gpm @ 60 psi, 4.5 L/min @ 414 kPa.
- Solid metal cast body
- Two or Three hole mount
- Hot and cold stems are interchangeable
- All operating parts are replaceable from the top
- 1/4 turn handle stops
- Control mechanism is a rotating cylinder type with stainless steel plate and 90° rotation, with replaceable non-metallic seats
- 1/2"-14 NPSM threaded male inlet shanks
- Models have plastic push pop-up with overflow with plated flange and stopper
- Note: Standard mounting thickness can be extended by 1" (25mm) with RP76691

WARRANTY

- Parts and Finish – Lifetime limited warranty; or for commercial purchasers, 10 years for multi-family residential (apartments and condominiums) and 5 years for all other commercial uses, in each case from the date the product is received by the original purchaser or their authorized representative (installation contractor, etc.).
- Please go to www.deltafaucet.com for the complete details of our limited warranty.

WaterSense Meets EPA Criteria
Certified by CSA Group

COMPLIES WITH:

- ASME A112.18.1 / CSA B125.1
- ASME A112.18.2 / CSA B125.2
- EPA WaterSense®
- ♿ ICC/ANSI A117.1 - Valve control only

Delta Faucet Company reserves the right (1) to make changes in specifications and materials, and (2) to change or discontinue models, both without notice or obligation. Dimensions are for reference only. See current full-line price book or www.deltafaucet.com for finish options and product availability.

DSP-L-25993LF Rev. A

Delta Faucet Company
55 E. 111th Street, Carmel, IN 46280
350 South Edgeware Road, St. Thomas, ON N5P 4L1
© 2025 Delta Faucet Company